ROHS

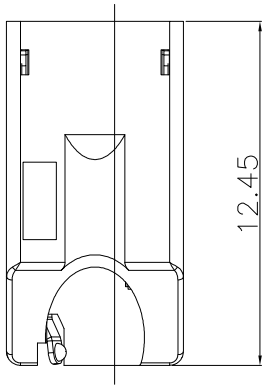

Model NO	PJ-620
Schematic	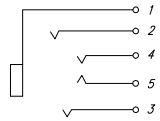

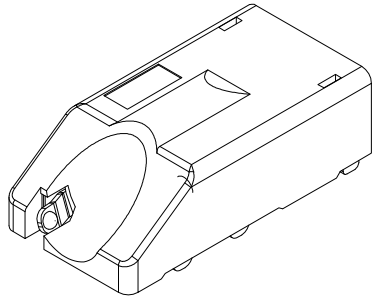

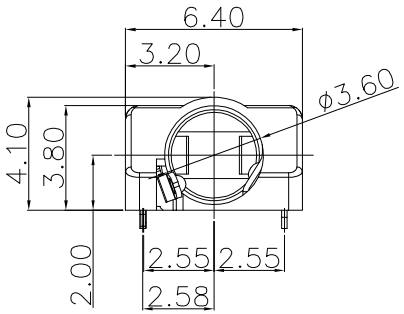

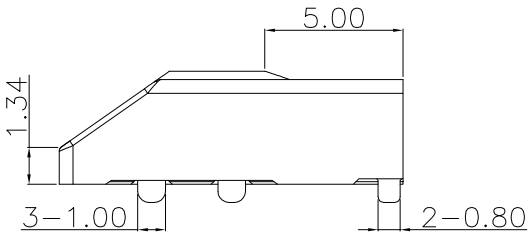

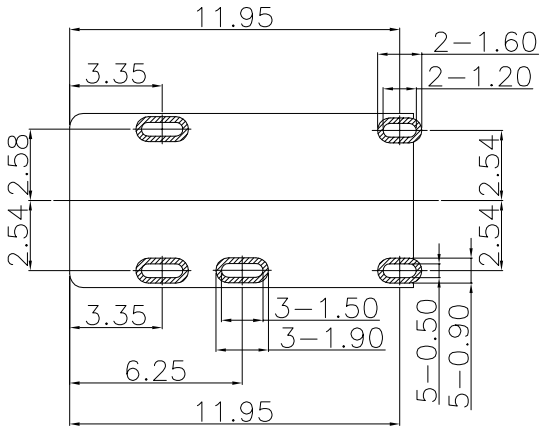

P.C.B LAYOUT
TOP VIEW

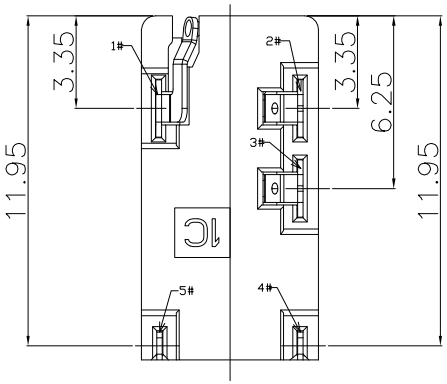

Rating:1A 30V DC
Contact Resistance:100 mΩ Max.
Operating temperature:-25℃~80℃
Operating force:3-20N
Operating Life:5,000cycles

ITEM	PART NAME	Serial number	QTY.	MATERIAL	FINISHING	REMARK
②	Shunt terminal	———	6	Phosphor bronze	Plating Au	———
①	Housing	———	1	PPA	Black	———

APPROVALS		DATE	LCZY ELECTRONICS(SHEN ZHEN)CO.,LTD
DRAWN	S.L.L	2019.10.12	
CHECKED			TITLE: PHONE JACKES
APPROVALS			PART NO.

TOLERANCES ARE			ANGLE	UNIT: mm	SCALE: 1:1	PROJ:
	30~以上	±0.30	±2°			
	10~30	±0.20		DRAWING NO.	———	SHEET 1 OF 1
	5~10	±0.15				
	~ 5	±0.10				

ECN NO.	REV.	DATE.	DESCRIPTION.	CHANGE.	CHECK.	APPRO.
———	A	———	NEW	———	———	———