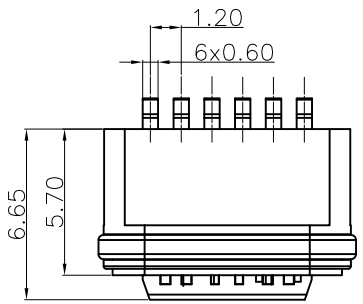

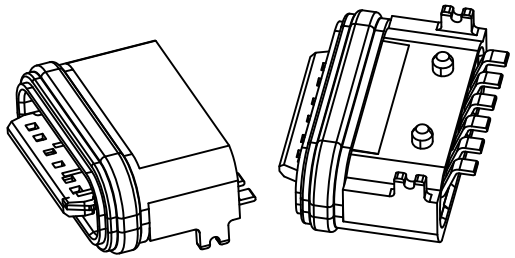

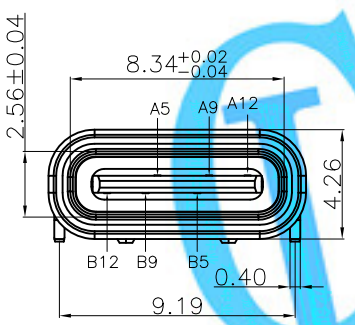

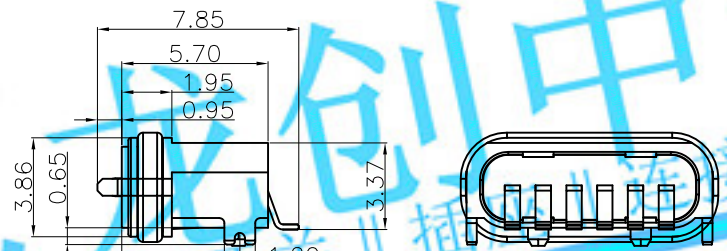

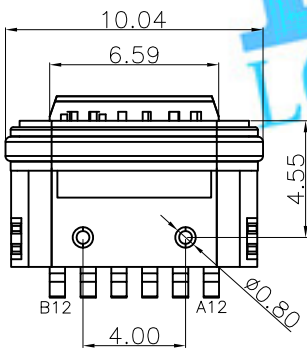

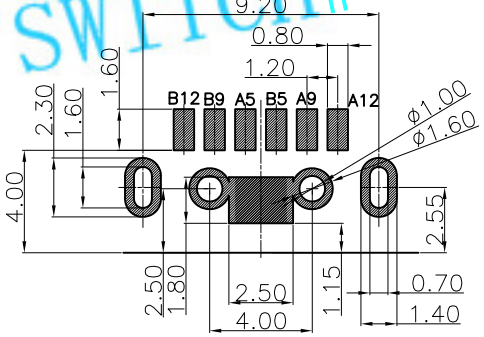

RECOMMENDED PCB LAYOUT
TOLERANCE UNSPECIFIED: ±0.05mm

1. Material/Plated
1.1 Housing: High temperature thermoplastic, Black UL 94V-0.
1.2 Terminal: Copper Alloy, Gold Plated Nickel Underplated
1.3 Shell: Zinc Alloy, Nickel plated
1.4 Ring: Silicon
1.5 Epoxy: Epoxy, Black
2. Electrical Performance
2.1 Rated Voltage: 30V AC
2.2 Rated Current: 5.0A Max.
2.3 Contact Resistance: 40mΩ Max.
2.4 Insulation Resistance: 100MΩ Min.
2.5 Dielectric Strength: 100V AC
3. Mechanical Performance
3.1 Insertion Force: 5-20N
3.2 Withdraval Force: 6-20N
3.3 Durability: 10000 Cycles
4. Operating Temperature: -25° C To +85° C
5. Waterproof: IPX7

Connector Pin Assignments

A5	CC1	B12	GND
A9	VBUS	B9	VBUS
A12	GND	B5	GND
PIN	SIGNAL NAME	PIN	SIGNAL NAME

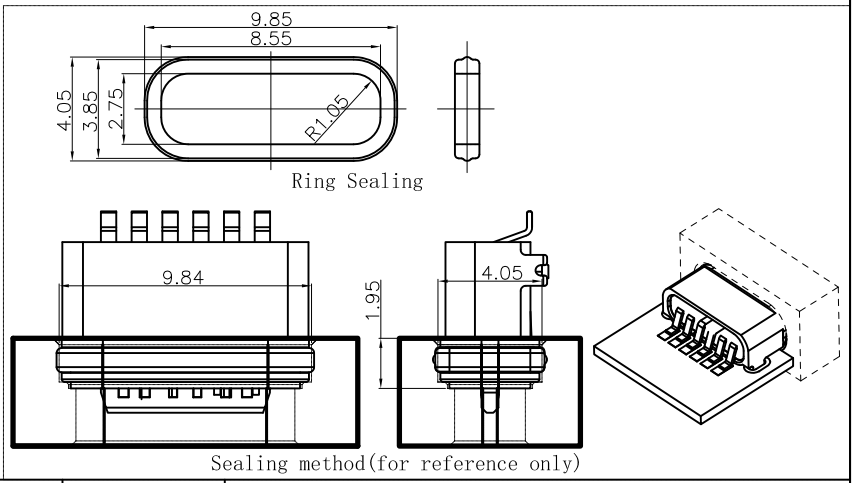

Sealing method(for reference only)

龙创中业 LCZY SWITCH || JACK || CONNECTOR 开关 || 插座 || 连接器

REV.	DESCRIPTION	ECN NO.	NAME	DATE
A	NEW RELEASE		Tom	2019-09-23

REVISIONS

DRAWN	Tom	2019-09-23
CHECKED	Ango	2019-09-23
APPROVE	Kevin	2019-09-23
SCALE: N/A	SHEET: 1 OF 1	

DIMRNSION TOLERANCE
X
X.X ±0.35
X.XX ±0.25
X.XXX ±0.15
GENERAL ANGLE: ±3°
UNIT: mm
LEVEL C31

龙创中业电子科技（东莞）有限公司

TITLE	USB TYPE-C F 6P WATERPROOF
PART NO.	UCX-038S1A
DWG. NO.	

TK-RD-001A