| REV. | ECN. NO. | APPD. |
|---|---|---|
| | | |
| | | |
| | | |

Pb Process Capable

RoHS Compliant 2002/95/EC

Halogen Free

## DIMENSIONS

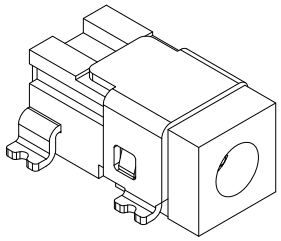

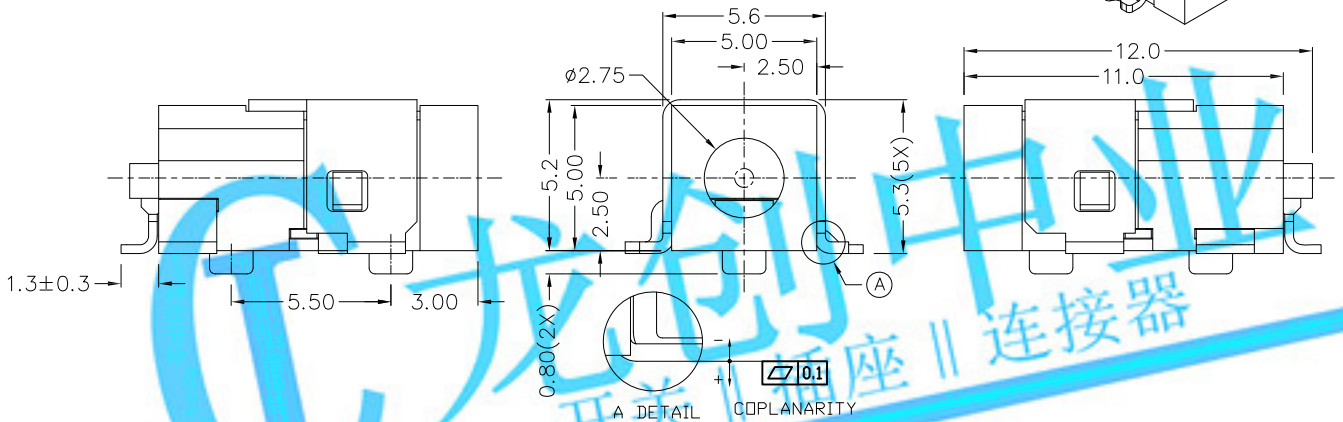


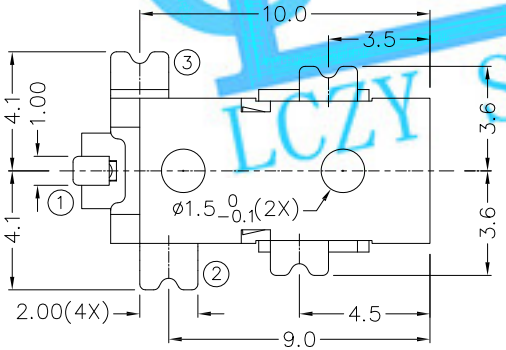


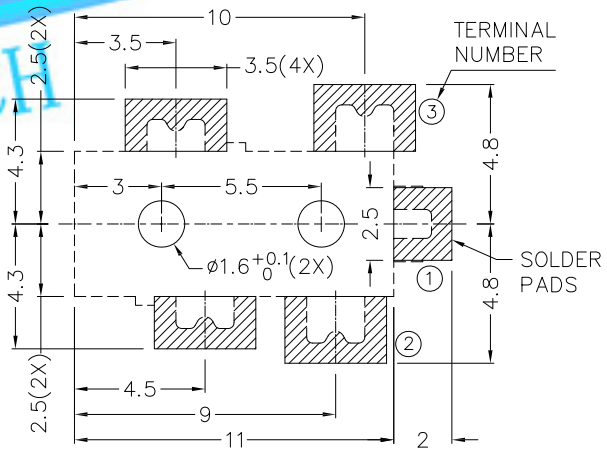


RECOMMENDED P.C.B. LAYOUT
TOLERANCE:±0.05
(TOP VIEW)

MODEL CODE:
DCT0-051DHS- A A 10 BK S 0 1
(1) (2) (3)(4)(5) (6) (7)(8) (9)

(1):Series type:SMD DC POWER JACK.
(2):Series No.
(3):Schematic option: A
(4):Center pin diameter:
A=ø0.65mm
(5):Material of housing:
10=PA10T
(6):Housing color:
BK=Black
(7):Terminal plating:
S=Silver(Ag)
(8):Special option:
0=No special option
(9):Packing mode:
1=Reel packing

Specification:
1.Rating : 2.5A/16V DC Max.
2.Contact resistance: ≤30mΩ
After test:≤60mΩ
3.Insulation resistance: ≥100MΩ (DC500V).
After test:≥50MΩ
4.Withstanding voltage: 500VAC.
5.Insertion and extraction force: 0.3~3Kgs..
6.Life test: 5,000cycles min.
7.Operation temperature range:-25℃~85℃.

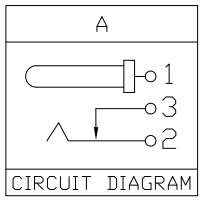


CIRCUIT DIAGRAM

| MODEL NO. | A |
|---|---|
| CENTER PIN | ø0.65mm |

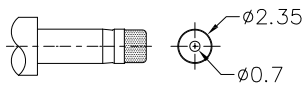


DC MATE PLUG

Bill of materials:

| NO. | PARTS | MATERIAL | Q'TY | FINISHING |
|---|---|---|---|---|
| 5 | TERMINAL 1 | COPPER | 1 | SILVER PLATED |
| 4 | TERMINAL 2 | COPPER ALLOY | 1 | SILVER PLATED |
| 3 | TERMINAL 3 | BRASS | 1 | SILVER PLATED |
| 2 | SHIELD | COLD ROLLED STEEL | 1 | NICKEL PLATED |
| 1 | HOUSING | PA10T | 1 | UL94V-0 |

| TOLERANCE | ANGLES |
|---|---|
| ±0.3 | ±2° |

UNITS mm
MAT'L SEE NOTE
FINISH SEE NOTE
Q'TY

THESE DRAWINGS AND SPECIFICATIONS ARE THE PROPERTY OF ACCURATE INNOTECH INC AND SHALL NOT BE REPRODUCED, COPIED OR USED IN ANY MANNER WITHOUT THE PRIOR WRITTEN CONSENT OF ACCURATE INNOTECH INC.

LONGCHUANG ZHONGYE (HK)CO.,LIMITED

| TITLE: | PART NO.: |
|---|---|
| SMD DC POWER JACK | DCT0-051DHS |
| DR: Ricky 2018/10/01 | DWG NO.: AT0-051DHS |
| CHKD: Ricky 2018/10/01 | |
| APPD: | |

| SCALE | SHEET | REV. | CUSTOMER DRAWING |
|---|---|---|---|
| 1:1 | 1/1 | A | |

龙创中业 开关插座 | 连接器 LCZY SWITCH