Pb Process Capable

RoHS Compliant 2002/95/EC

REV.	ECN. NO.	APPD.

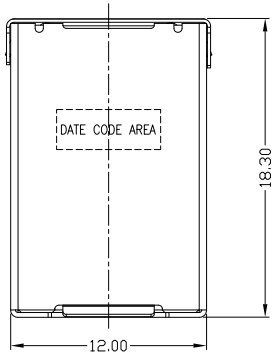

PIN NUMBER	SIGNAL NAME
1	VBUS
2	D-
3	D+
4	GND
5	STDA_SSTX-
6	STDA_SSTX+
7	GND_DRAIN
8	STDA_SSRX-
9	STDA_SSRX+
Shell	Shield

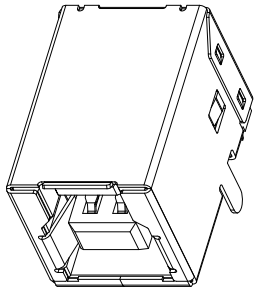

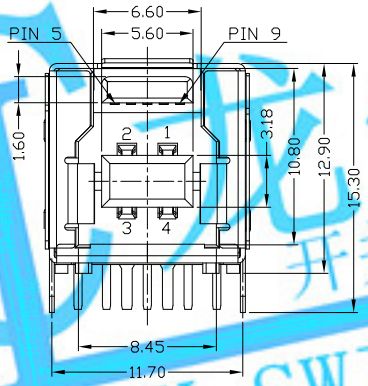

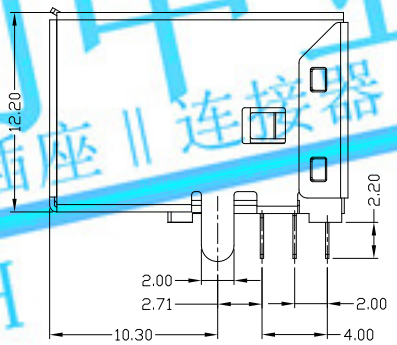

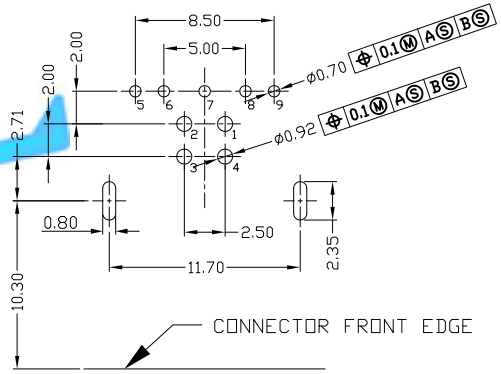

RECOMMENDED PCB LAYOUT

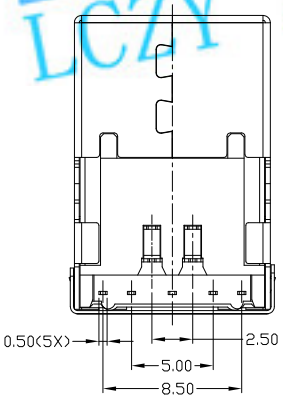

NOTES:

1. ELECTRICAL:
   1) CURRENT RATING:1.5AMP;
   2) INSULATION RESISTANCE: 100MΩ MIN;
   3) CONTACT RESISTANCE: 30mΩ MAX;
   4) WITHSTANDING VOLTAGE: 100V AC;
   5) OPERATING TEMPERATURE:-40°C ~ +85°C.
2. Mechanical:
   1) Mating Force: 35N MAX
   2) Unmating Force: 10N MIN.
3. DIMENSIONS MARKED "▼" TO BE CHECKED BY Q.C & IPQC.
4. PART NO.

USBF-09*N-4BLRC10

- W:WHITE / B:BLACK / BL:BLUE
- 1:Au 1U" / 5:Au 15U" / 6:Au 30U"
- 1:PBT / 2:PA6T / 3:PA9T / 4:LCP

Bill of materials:

NO	PARTS	MATERIAL	QTY	FINISHING
5	HOUSING	LCP+30%GF	1	UL94V-0
4	BACK COVER	COPPER ALLOY/SPCC	1	PLATED NICKEL
3	SHELL	COPPER ALLOY	1	PLATED NICKEL
2	TERMINAL(4P)	COPPER ALLOY	4	PLATED GOLD/TIN
1	TERMINAL(5P)	COPPER ALLOY	5	PLATED GOLD/TIN

X. ±0.35	X.° ±2°
.X ±0.3	.X° ±1°
.XX ±0.25	.XX°
.XXX ±0.15	.XXX°

UNITS mm

MAT'L SEE NOTE

FINISH SEE NOTE

Q'TY

THESE DRAWINGS AND SPECIFICATIONS ARE THE PROPERTY OF ACCURATE INNOTECH INC AND SHALL NOT BE REPRODUCED, COPIED OR USED IN ANY MANNER WITHOUT THE PRIOR WRITTEN CONSENT OF ACCURATE INNOTECH INC.

LONGCHUANG ZHONGYE (HK)CO.,LIMITED

TITLE: USB 3.0 BF DIP 90度 直脚	PART NO.: USBF-09*N-4BLRC10
DR: gan 2016/08/30	DWG NO.: AII-RC10
CHKD: gan 2016/08/30	SCALE 1:1 / SHEET 1/1 / REV. B / CUSTOMER DRAWING
APPD:	

LCZY SWITCH 龙创中业 开关 || 插座 || 连接器