Pb Process Capable

RoHS Compliant 2002/95/EC

Halogen Free

REV.	ECN. NO.	APPD.

DIMENSIONS

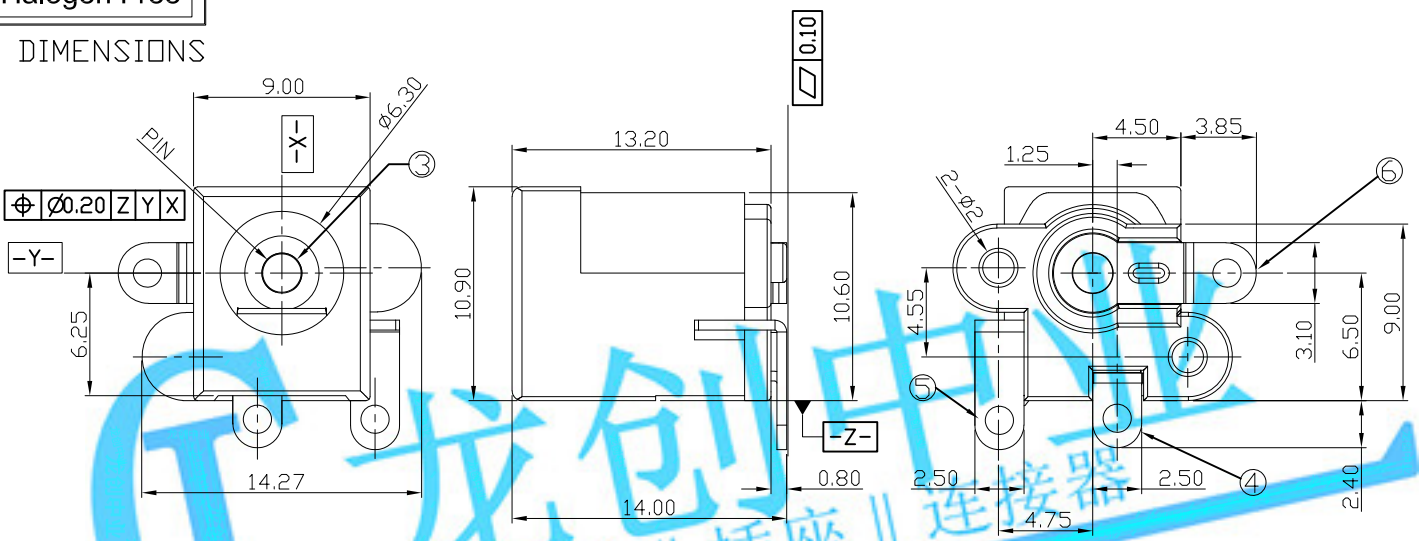

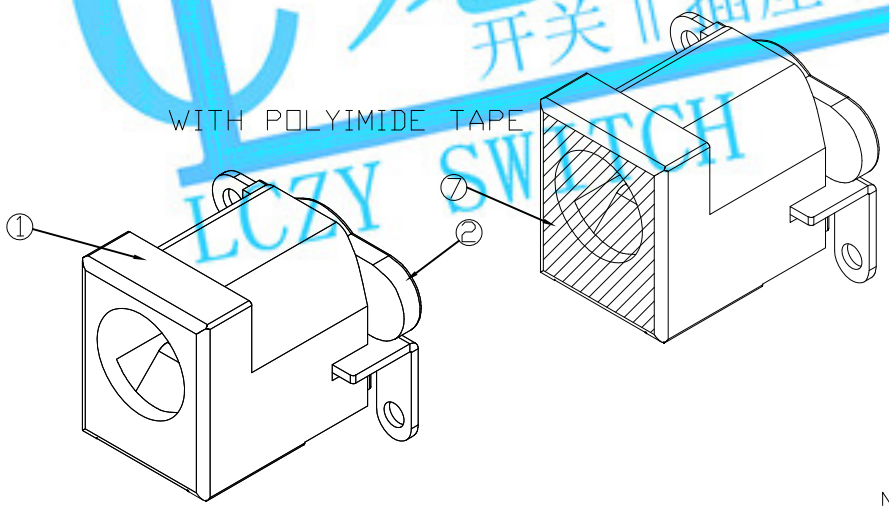

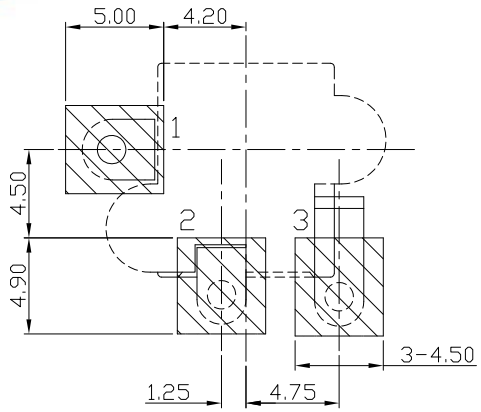

RECOMMENDED PCB LAYOUT <TOP VIEW>

NOTE : TOLERANCE FOR PCB LAYOUT IS ± 0.05

MODEL CODE:

DCS0-0240E- A □ LC BK S 0 1

(1) (2) (3)(4)(5)(6)(7)(8)(9)

(1):Series type:SMD DC POWER JACK.
(2):Series No.
(3):Schematic option: A
(4):Center pin diameter:
E=ø1.3 , H=ø2.0 , J=ø2.5
(5):Material of housing:
LC=LCP
(6):Housing color:
BK=Black
(7):Terminal plating
S=Silver(Ag)
(8):Special option:
0=No special option
(9):Packing mode:
1=Reel packing

Specification:
1.Rating :DC 20V 3A.
2.Contact resistance : ≤30mΩ.
3.Insulation resistance : ≥100MΩ (DC500V).
4.Withstanding voltage: 500VAC .
5.Insertion and extraction force: 3~30N.
6.life test: 5000cycles min.
7.Operation temperature range:-25°C~85°C

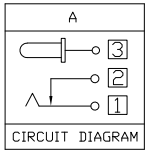

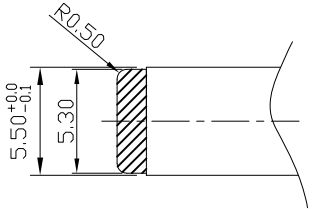

DC MATE PLUG

Model No.	E	H	J
CENTER PIN	ø1.3	ø2.0	ø2.5

Bill of materials:

NO.	PARTS	MATERIAL	Q'TY	FINISHING
⑦	POLYIMIDE TAPE		1	
⑥	PIN TERMINIAL	BRASS	1	Ag
⑤	SHUNT TERMINAL	BRASS	1	Ag
④	SPRING TERMINAL	PBS	1	Ag
③	CENTER PIN	COPPER	1	NI
②	BOTTOM COVER	PA10T	1	BLACK
①	P1_HOUSING	LCP	1	UL94V-0 BLACK

TOLERANCE	ANGLES
.X ± 0.3	X°.±5°
.XX ± 0.2	.X°±3°

UNITS mm

MAT'L SEE NOTE

FINISH SEE NOTE

Q'TY

THESE DRAWINGS AND SPECIFICATIONS ARE THE PROPERTY OF ACCURATE INNOTECH INC AND SHALL NOT BE REPRODUCED, COPIED OR USED IN ANY MANNER WITHOUT THE PRIOR WRITTEN CONSENT OF ACCURATE INNOTECH INC.

LONGCHUANG ZHONGYE (HK)CO.,LIMITED

TITLE: SMD DC POWER JACK	PART NO.: DCS0-0240E
DR: Ricky 2019/03/22	DWG NO.: ASS-0240E
CHKD: Ricky 2019/03/22	SCALE 1:1 / SHEET 1/1 / REV. A / CUSTOMER DRAWING
APPD:	

龙创中业 开关 插座 连接器 LCZY SWITCH