REV.	ECN. NO.	APPD.

Pb Process Capable

RoHS Compliant 2002/95/EC

DIMENSIONS

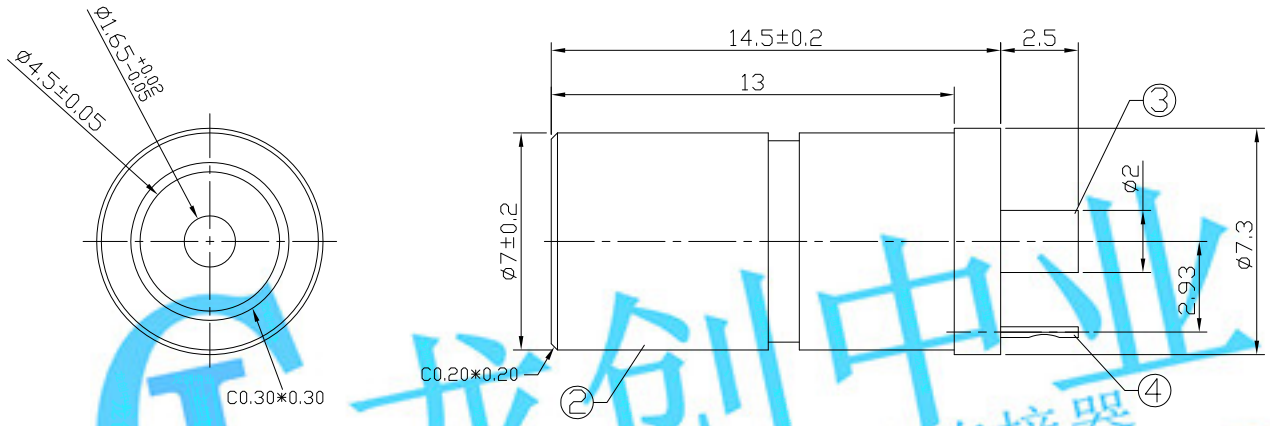

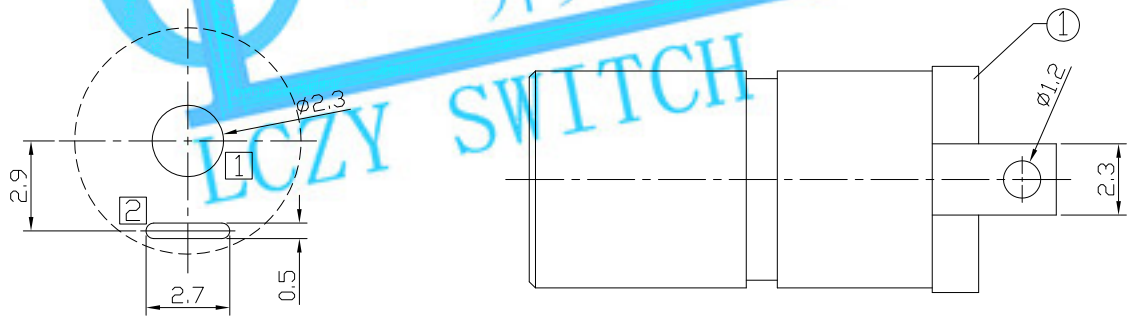

RECOMMENDED P.C.B. LAYOUT
UNSPECIFIED TOLERANCE:±0.05
(TOP VIEW)

MODEL CODE:

DCB0-00830- B G 66 BK T 0 4
(1) (2) (3)(4) (5) (6)(7)(8) (9)

(1):Series type: DC POWER JACK.
(2):Series No.
(3):Schematic option: B
(4):Center pin diameter:
G=1.65 (Only)
(5):Material of housing:
66=PA66 (Only)
(6):Housing color:
BK=Black (Only)
(7):Terminal plating
T=Tin(Sn) (Standard)
S=Silver(Ag)
G=Gold(Au)
(8):Special option:
0=No special option
(9):Packing mode:
4=Bag packing

SPECIFICATION:

1.Rating : DC 20V 3A;
2.Contact resistance: ≤50mΩ;
After test:≤100mΩ
3.Insulation resistance: ≥100MΩ (DC500V);
After test:≥50MΩ
4.Withstand voltage: 500VAC ;
5.Insertion and extraction force: 3-30N;
6.life test: 5,000 cycles;
7.Operation temperature range:-20°C~70°C;
8.Preservative temperature range:-40°C~85°C;

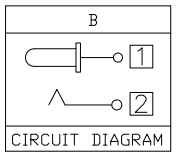

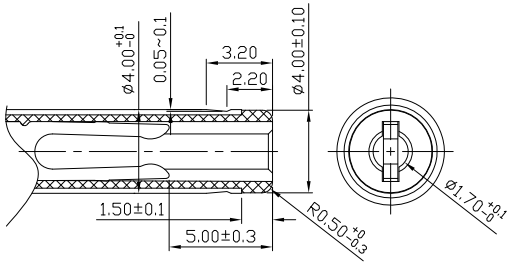

DC MATE PLUG

龙创中业 开关‖插座‖连接器 LCZY SWITCH

○: ITEM NO. □: TERMINAL NO.

NO.	PARTS	MATERIAL	Q'TY	FINISHING
④	Tip spring 2	Stainless steel	1	Tin plating
③	Center pin 1	Brass	1	Tin plating
②	Bushing	Brass	1	Nickel plating
①	Housing	PA66	1	

TOLERANCE	ANGLES
±0.5	±5°

UNITS mm
MAT'L SEE NOTE
FINISH SEE NOTE
Q'TY

THESE DRAWINGS AND SPECIFICATIONS ARE THE PROPERTY OF ACCURATE INNOTECH INC AND SHALL NOT BE REPRODUCED, COPIED OR USED IN ANY MANNER WITHOUT THE PRIOR WRITTEN CONSENT OF ACCURATE INNOTECH INC.

LONGCHUANG ZHONGYE (HK)CO.,LIMITED

TITLE: DC POWER JACK	PART NO.: DCB0-00830
DR: Ricky 2019/05/02	DWG NO.: AB0-00830
CHKD: Ricky 2019/05/02	SCALE 1:1 / SHEET 1/1 / REV. A / CUSTOMER DRAWING
APPD:	