Pb Process Capable | RoHS Compliant 2002/95/EC | Halogen Free

REV.	ECN. NO.	APPD.

DIMENSIONS

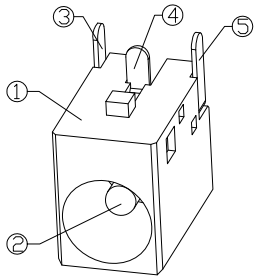

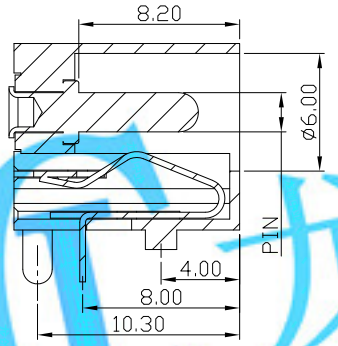

A-A SECTION

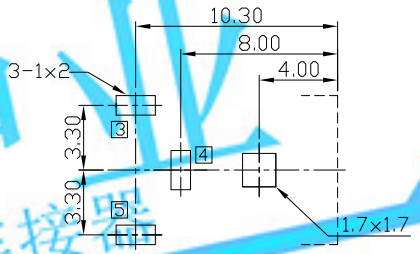

RECOMMENDED P.C.B. LAYOUT
UNSPECIFIED TOLERANCE:±0.05
(TOP view)

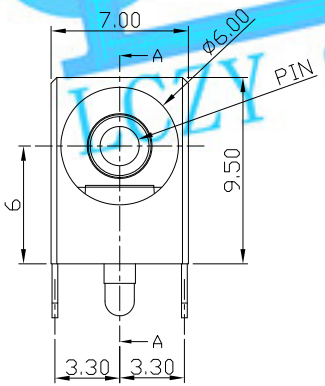

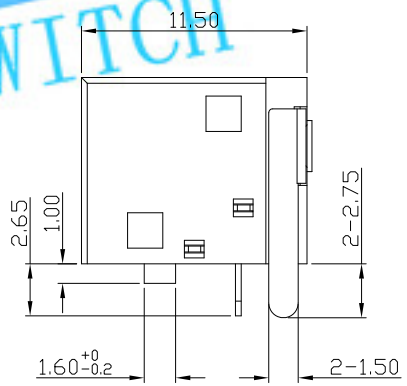

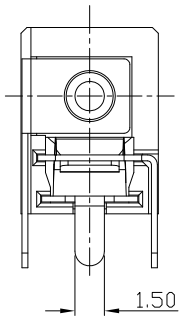

MODEL CODE:
DCS0-02060- A □ 10 BK S 0 4
(1) (2) (3)(4)(5)(6)(7)(8)(9)
(1):Series type:DIP DC POWER JACK.
(2):Series No.
(3):Schematic option: A
(4):Center pin diameter:
H=ø2.0mm , J=ø2.5mm
(5):Material of housing:
10=PA10T
(6):Housing color:
BK=Black
(7):Terminal plating
S=Silver(Ag)
(8):Special option:
0=No special option
(9):Packing mode:
1=Reel packing
4=Bag packing

Specification:
1.Rating :DC 24V 7A.
2.Contact resistance : ≤30mΩ.
3.Insulation resistance : ≥100MΩ (DC500V).
4.Withstanding voltage: 500VAC .
5.Insertion and extraction force: 3~30N.
6.life test: 5000cycles min.
7.Operation temperature range:-25°C~85°C

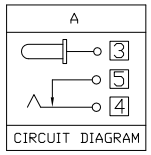

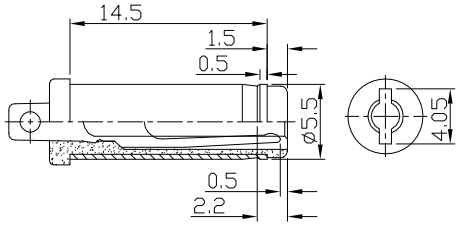

Model No.	H	J
CENTER PIN	ø2.0	ø2.5

DC MATE PLUG
(TOLERANCE ±0.05)

Bill of materials:

NO.	PARTS	MATERIAL	Q'TY	FINISHING
⑤	SHUNT TERMINAL	BRASS T=0.30	1	Ag 20U" OVER NI 50U"
④	SPRING TERMINAL	PBS T=0.30	1	Ag 20U" OVER NI 50U"
③	CENTER PIN TERMINAL	BRASS T=0.30	1	Ag 20U" OVER NI 50U"
②	CENTER PIN	BRASS	1	NI 60U" OVER CU80U"
①	P1_HOUSING	PA10T BLACK	1	UL94V-0

TOLERANCE	ANGLES
.X ± 0.5	X°.±2°
.XX ± 0.3	.X°±1°
.XXX ± 0.2	

UNITS mm
MAT'L SEE NOTE
FINISH SEE NOTE
Q'TY

THESE DRAWINGS AND SPECIFICATIONS ARE THE PROPERTY OF ACCURATE INNOTECH INC AND SHALL NOT BE REPRODUCED, COPIED OR USED IN ANY MANNER WITHOUT THE PRIOR WRITTEN CONSENT OF ACCURATE INNOTECH INC.

LONGCHUANG ZHONGYE (HK)CO.,LIMITED

TITLE: DIP DC POWER JACK	PART NO.: DCS0-02060
DR: Ricky 2019/03/25	DWG NO.: ASS-02060
CHKD: Ricky 2019/03/25	SCALE 1:1 / SHEET 1/1 / REV. A / CUSTOMER DRAWING
APPD:	

龙创中业 开关 | 插座 | 连接器 LCZY SWITCH