REV.	ECN. NO.	APPD.

RoHS Compliant 2002/95/EC

Process Capable

Halogen Free

DIMENSIONS

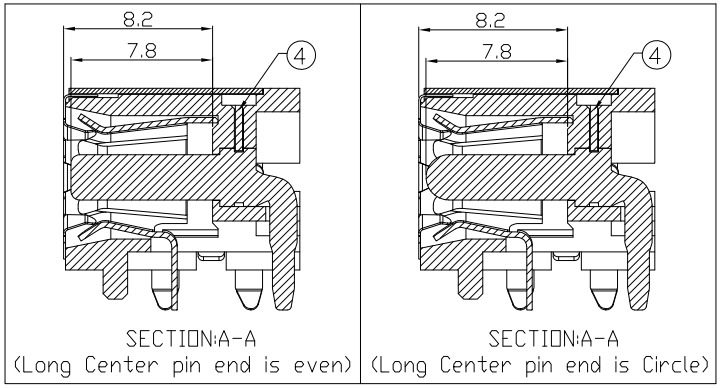

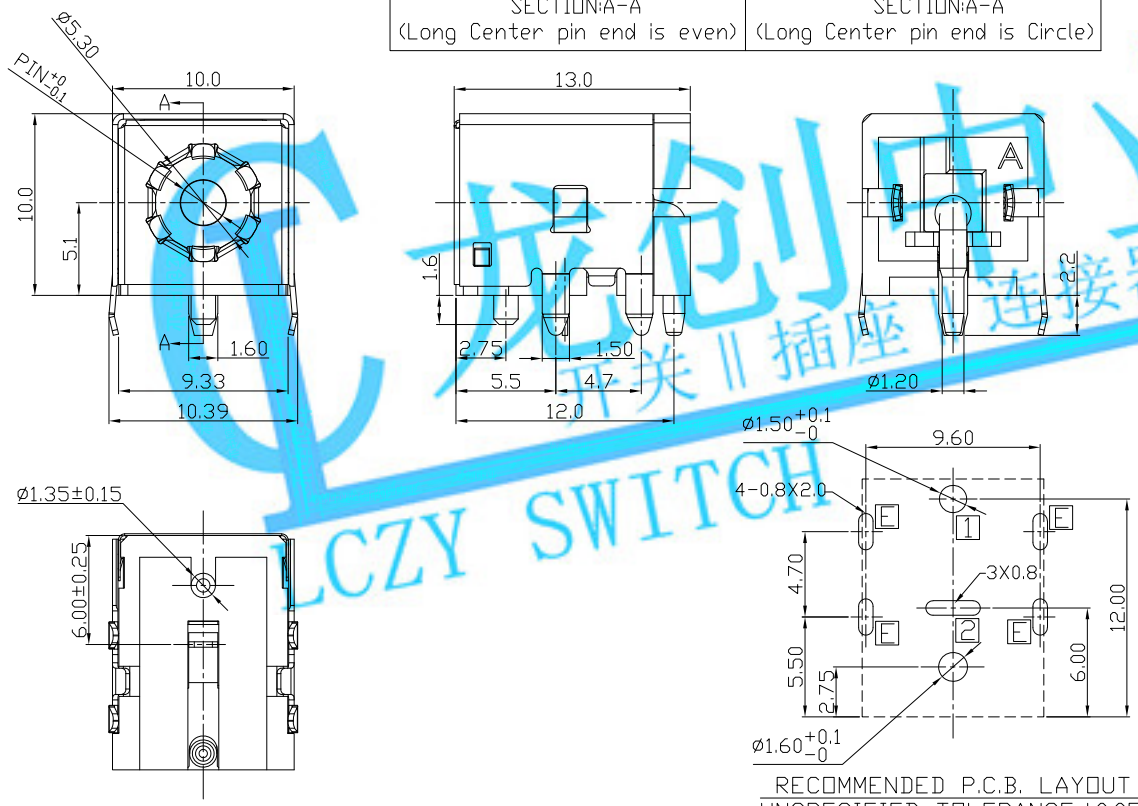

RECOMMENDED P.C.B. LAYOUT
UNSPECIFIED TOLERANCE:±0.05
(TOP VIEW)

○: ITEM NO. □: TERMINAL NO.

MODEL CODE:
DCB0-01460- B □ 10 BK S 0 1
(1) (2) (3)(4) (5) (6) (7)(8) (9)

(1):Series type:DIP DC POWER JACK.
(2):Series No.
(3):Schematic option: B
(4):Center pin diameter:
G=Ø1.65 , H=Ø2.0 , J=Ø2.5
(5):Material of housing:
10=PA10T(Standard)
(6):Housing color:
BK=Black , 3C=Orange(157C)
(7):Terminal plating
T=Tin(Sn) , S=Silver(Ag) , G=Gold(Au)
(8):Special option:

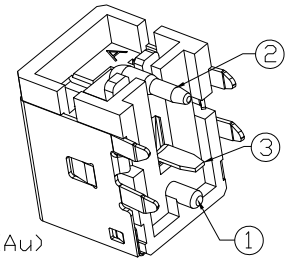

DESCRIPTION	Code	Specification	Plating
Center pin	1	Long Center pin end is even	Ni plating
	A		Au plating
	0	Long Center pin end is Circle	Ni plating
	G		Au plating
Center pin and Ground Terminal	T		Sn plating

(9):Packing mode:
1=Reel packing
3=Plastic box packing
4=Bag packing

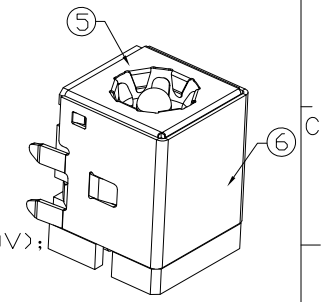

SPECIFICATION:
1.Rating : DC 20V 4A;
2.Contact resistance: ≤30mΩ;
After test:≤50mΩ
3.Insulation resistance: ≥100MΩ (DC500V);
After test:≥50MΩ
4.Withstand voltage: 500VAC;
5.Insertion and extraction force: 3-30N;
6.life test: 5,000 cycles;
7.Operation temperature range:-20°C~70°C;
8.Preservative temperature range:-40°C~85°C;

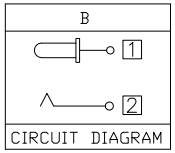

CIRCUIT DIAGRAM

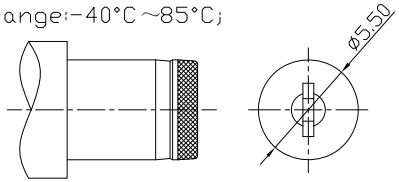

DC MATE PLUG

Model No.	G	H	J
CENTER PIN	Ø1.65	Ø2.0	Ø2.5

NO.	PARTS	MATERIAL	Q'TY	FINISHING
⑥	Ground Terminal E	Copper Alloy	1	Tin/Ni plating
⑤	Shield plate	Stainless steel	1	
④	Terminal	Copper Alloy	1	
③	Tip spring 2	Copper Alloy	1	See "Ordering info"
②	Center pin 1	Zn Alloy	1	See "Ordering info"
①	Housing	High temp.Thermoplastic	1	Halogen Free, Black

TOLERANCE	ANGLES
.X ±0.50	X ±5°
.XX ±0.30	.X ±3°
.XXX ±0.15	.XX ±2°

UNITS mm
MAT'L SEE NOTE
FINISH SEE NOTE
Q'TY

THESE DRAWINGS AND SPECIFICATIONS ARE THE PROPERTY OF ACCURATE INNOTECH INC AND SHALL NOT BE REPRODUCED, COPIED OR USED IN ANY MANNER WITHOUT THE PRIOR WRITTEN CONSENT OF ACCURATE INNOTECH INC.

LONGCHUANG ZHONGYE (HK)CO.,LIMITED

TITLE: DIP DC POWER JACK	PART NO.: DCB0-01460
DR: Ricky 2019/05/03	DWG NO.: AB0-01460
CHKD: Ricky 2019/05/03	SCALE 1:1 / SHEET 1/1 / REV. A / CUSTOMER DRAWING
APPD:	

龙创中业 开关 插座 连接器 LCZY SWITCH