Process Capable

RoHS Compliant 2002/95/EC

REV.	ECN. NO.	APPD.

DIMENSIONS

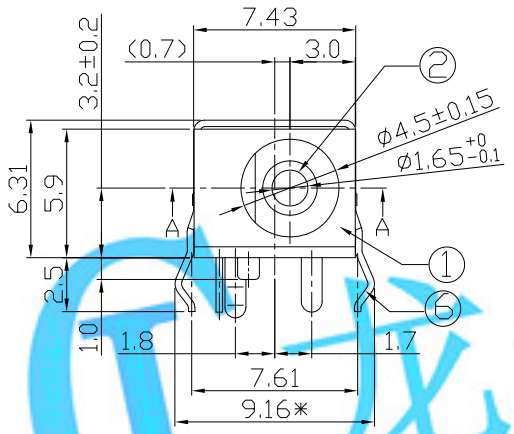

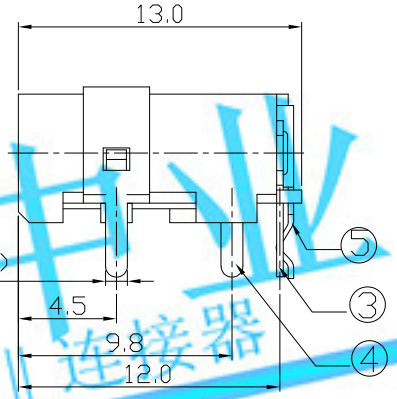

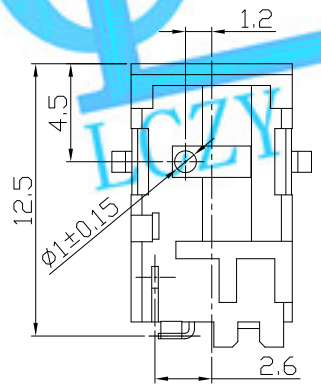

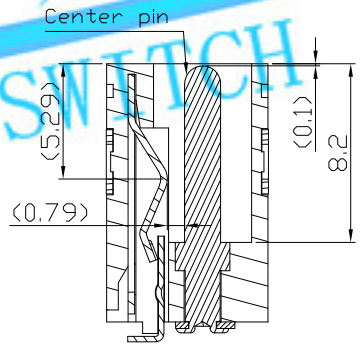

SECTION:A-A

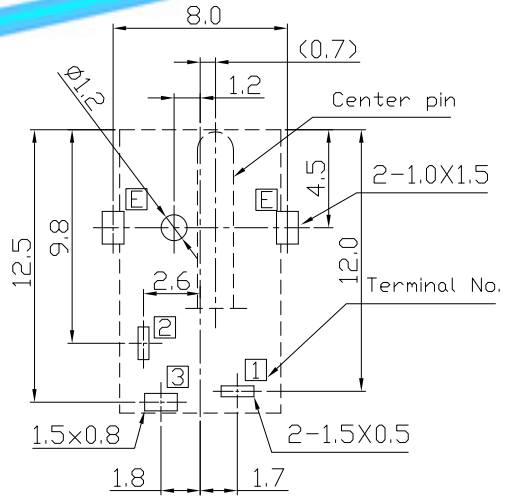

RECOMMENDED P.C.B. LAYOUT
UNSPECIFIED TOLERANCE:±0.05
(BOTTOM VIEW)

MODEL CODE:

DCB0-00300- A G PB BK S 0 3
(1) (2) (3)(4) (5) (6) (7)(8) (9)

(1):Series type:DIP DC POWER JACK.
(2):Series No.
(3):Schematic option: A , B
(4):Center pin diameter:
G=ø1.65
(5):Material of housing:
PB=PBT (Standard) 46=PA46
(6):Housing color:
BK=Black (Standard)
4B=Yellow(0190=PBT)
(7):Terminal plating
S=Silver(Ag) (Standard)
(8):Special option:
0=No special option
(9):Packing mode:
3=Plastic box packing
4=Bag packing

SPECIFICATION:

1.Rating : DC 20V 3A;
2.Contact resistance: ≤30mΩ;
After test:≤50mΩ
3.Insulation resistance: ≥100MΩ (DC500V);
After test:≥50MΩ
4.Withstand voltage: 500VAC ;
5.Insertion and extraction force: 3-30N;
6.life test: 5,000 cycles;
7.Operation temperature range:-20°C~70°C;
8.Preservative temperature range:-40°C~85°C;

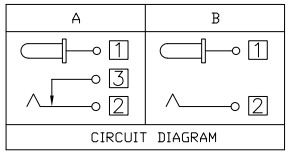

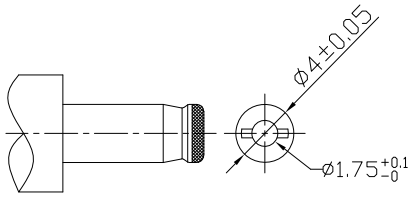

DC MATE PLUG

○: ITEM NO. □: TERMINAL NO.

NO.	PARTS	MATERIAL	Q'TY	FINISHING
⑥	Earth terminal E	Brass t=0.3	1	Silver plating
⑤	Shunt terminal 3	Brass t=0.25	1	Silver plating
④	Tip spring 2	Phosphor bronze t=0.3	1	Silver plating
③	Center pin terminal 1	Brass t=0.3	1	Silver plating
②	Center pin 1	Copper alloy	1	Nickel plating
①	Housing	PBT/PA46	1	

TOLERANCE	ANGLES
±0.3	±2°

THESE DRAWINGS AND SPECIFICATIONS ARE THE PROPERTY OF ACCURATE INNOTECH INC AND SHALL NOT BE REPRODUCED, COPIED OR USED IN ANY MANNER WITHOUT THE PRIOR WRITTEN CONSENT OF ACCURATE INNOTECH INC.

UNITS mm
MAT'L SEE NOTE
FINISH SEE NOTE
Q'TY

LONGCHUANG ZHONGYE (HK)CO.,LIMITED

TITLE: DIP DC POWER JACK	PART NO.: DCB0-00300
DR: Ricky 2019/04/11	DWG NO.: AB0-00300
CHKD: Ricky 2019/04/11	SCALE 1:1 / SHEET 1/1 / REV. A / CUSTOMER DRAWING
APPD:	

龙创中业 开关 插座 连接器 LCZY SWITCH