REV.	ECN. NO.	APPD.

RoHS Compliant 2002/95/EC

Process Capable

Halogen Free

DIMENSIONS

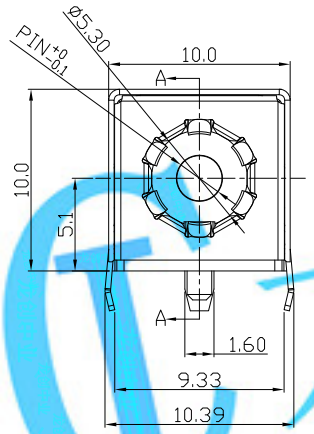

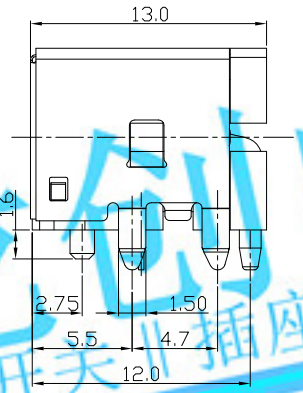

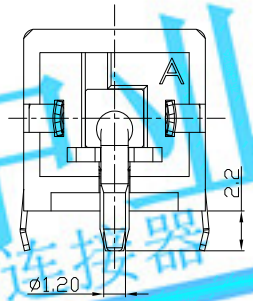

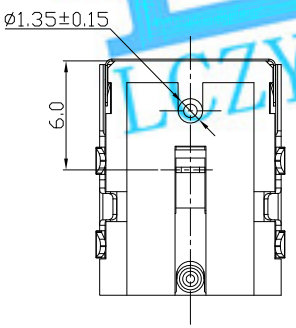

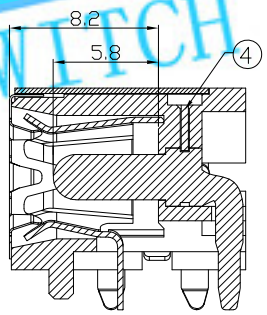

SECTION:A-A
(Short Center pin end is Circle)

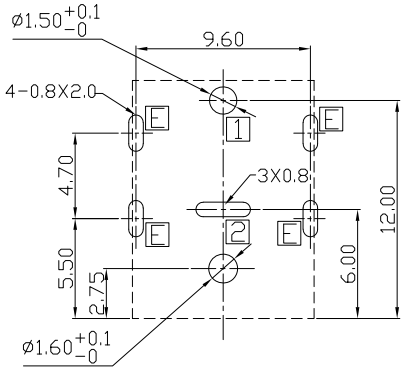

RECOMMENDED P.C.B. LAYOUT
UNSPECIFIED TOLERANCE:±0.05
(TOP VIEW)

MODEL CODE:
DCB0-0146F- B □ 10 BK S 0 1
(1) (2) (3)(4) (5) (6) (7)(8) (9)
(1):Series type:DIP DC POWER JACK.
(2):Series No.
(3):Schematic option: B
(4):Center pin diameter:
G=ø1.65 , H=ø2.0 , J=ø2.5
(5):Material of housing:
10=PA10T(Standard)
(6):Housing color:
BK=Black , 3C=Orange(157C)
(7):Terminal plating
T=Tin(Sn) , S=Silver(Ag)
(8):Special option:
0=No Special Option
G=Center pin is Gold(Au) plating
(9):Packing mode:
1=Reel packing
3=Plastic box packing
4=Bag packing

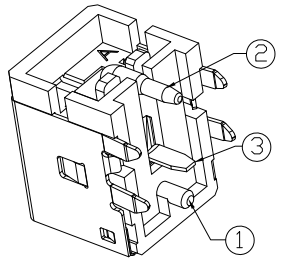

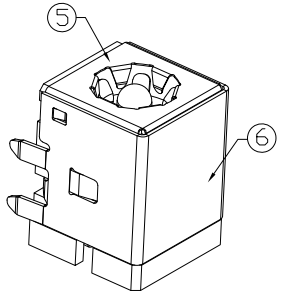

SPECIFICATION:
1.Rating : DC 20V 8A;
2.Contact resistance: ≤30mΩ;
After test:≤50mΩ
3.Insulation resistance: ≥100MΩ (DC500V);
After test:≥50MΩ
4.Withstand voltage: 500VAC;
5.Insertion and extraction force: 3-30N;
6.life test: 5,000 cycles;
7.Operation temperature range:-20°C~70°C;
8.Preservative temperature range:-40°C~85°C;

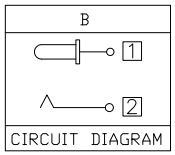

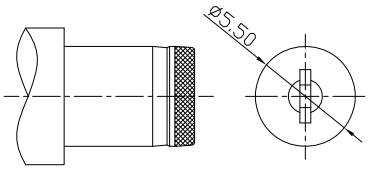

DC MATE PLUG

Model No.	G	H	J
CENTER PIN	ø1.65	ø2.0	ø2.5

○: ITEM NO. □: TERMINAL NO.

NO.	PARTS	MATERIAL	Q'TY	FINISHING
⑥	Ground Terminal E	Copper Alloy	1	Ni plating
⑤	Shield plate	Stainless steel	1	
④	Terminal	Copper Alloy	1	
③	Tip spring 2	Copper Alloy	1	See "Ordering info"
②	Center pin 1	Zn Alloy	1	See "Ordering info"
①	Housing	High temp.Thermoplastic	1	Halogen Free, Black

TOLERANCE	ANGLES
.X ±0.50	X ±5°
.XX ±0.30	.X ±3°
.XXX ±0.15	.XX ±2°

UNITS mm
MAT'L SEE NOTE
FINISH SEE NOTE
Q'TY

THESE DRAWINGS AND SPECIFICATIONS ARE THE PROPERTY OF ACCURATE INNOTECH INC AND SHALL NOT BE REPRODUCED, COPIED OR USED IN ANY MANNER WITHOUT THE PRIOR WRITTEN CONSENT OF ACCURATE INNOTECH INC.

LONGCHUANG ZHONGYE (HK)CO.,LIMITED

TITLE: DIP DC POWER JACK	PART NO.: DCB0-0146F
DR: Ricky 2019/05/06	DWG NO.: AB0-0146F
CHKD: Ricky 2019/05/06	SCALE 1:1 / SHEET 1/1 / REV. A / CUSTOMER DRAWING
APPD:	

龙创中业 开关 插座 连接器 LCZY SWITCH