Pb Process Capable

RoHS Compliant 2002/95/EC

REV.	ECN. NO.	APPD.

DIMENSIONS

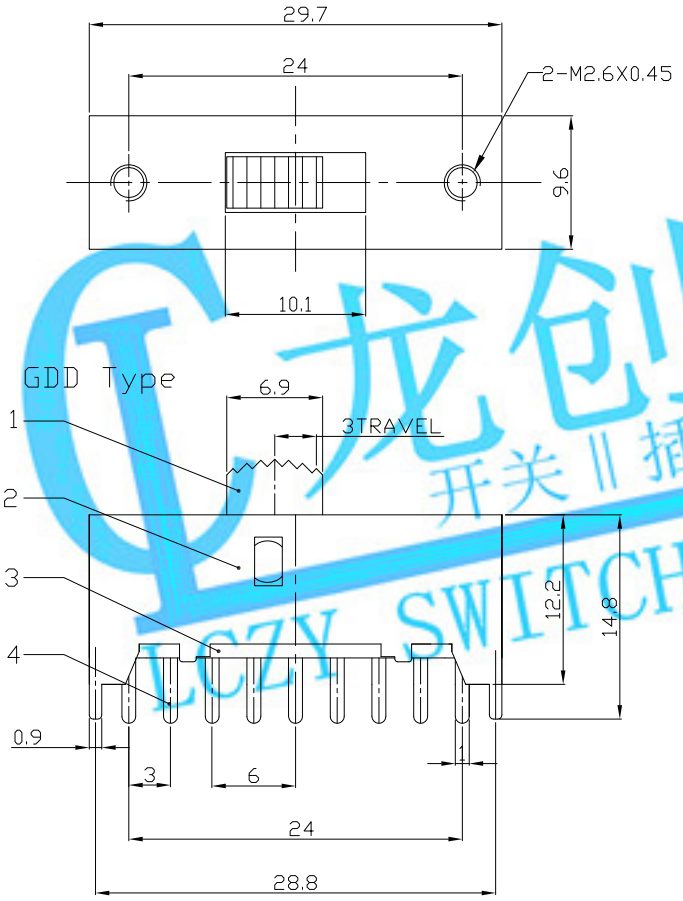

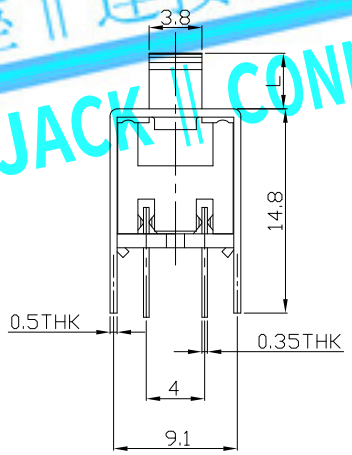

MODEL CODE

SS-62F01- GDD

Knob Type	L(mm)
GDD	~

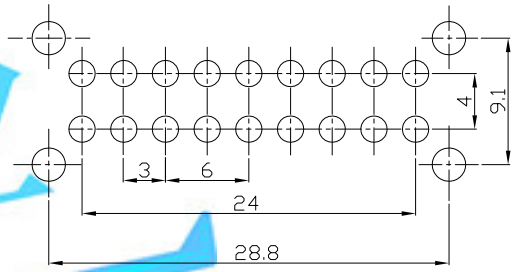

P.C.B LAYOUT
BOTTOM VIEW

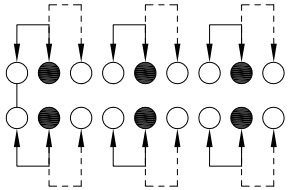

CIRCUIT DIAGRAM

ELECTRO-MECHANICAL CHARACTERISTICS

Refer to additional specifications

RATING	0.3A 50V DC
CIRCUIT	6P2T
CONTACT RESISTANCE	100mΩ MAX.
TIMING	NON-SHORTING
TRAVEL	3mm
OPERATING FORCE	200±80gf
OPERATING LIFE(cycles)	10,000

龙创中业
开关‖插座‖连接器
LCZY SWITCH‖ JACK‖ CONNECTOR

NO.	PARTS	MATERIAL	Q'TY	FINISHING
8				
7	STEEL BALL	STEEL	2	NATURAL
6	SPRING	STEEL WIRE	1	NATURAL
5	CONTACT CLIP	PBS STRIP	6	Ag PLATED
4	TERMINAL	BRASS STRIP	18	Ag PLATED
3	BASE	PHENOLIC RESIN	1	NATURAL
2	FRAME	STEEL STRIP	1	Ni PLATED
1	KNOB	POM	1	BLACK

WITHIN 1.5mm: ±0.1mm
OVER 1.5mm: ±0.2mm

THESE DRAWINGS AND SPECIFICATIONS ARE THE PROPERTY OF ACCURATE INNOTECH INC AND SHALL NOT BE REPRODUCED, COPIED OR USED IN ANY MANNER WITHOUT THE PRIOR WRITTEN CONSENT OF ACCURATE INNOTECH INC.

UNITS mm
MAT'L SEE NOTE
FINISH SEE NOTE
Q'TY

LONGCHUANG ZHONGYE (HK)CO.,LIMITED

TITLE: SLIDE SWITCH / VERTICAL
PART NO.: SS-62F01
DR: Ricky 2015/10/23
DWG NO.: ADL-62F01
CHKD: Ricky 2015/10/23
APPD:

SCALE	SHEET	REV.	
3:2	1/1	A	CUSTOMER DRAWING