REV.	ECN. NO.	APPD.

Pb Process Capable

RoHS Compliant 2002/95/EC

DIMENSIONS

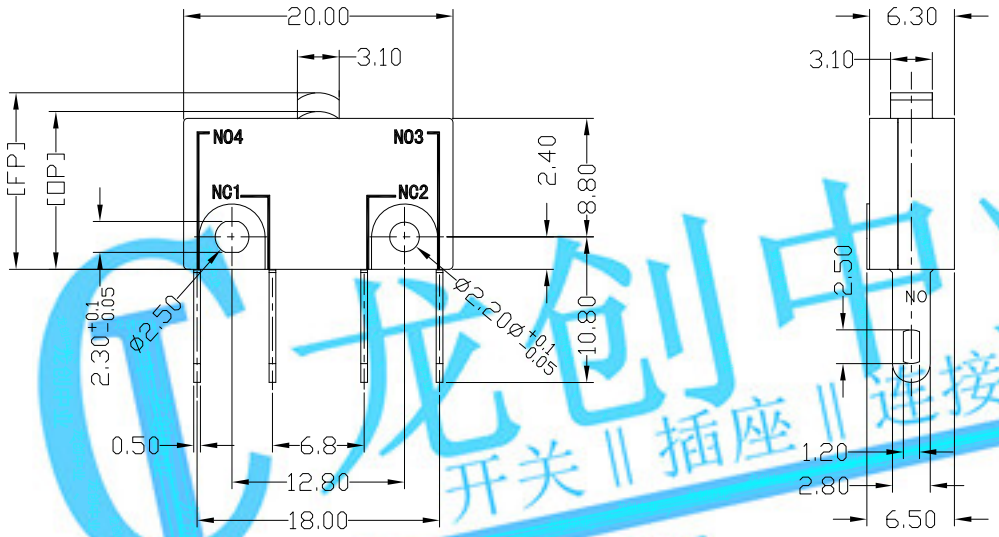

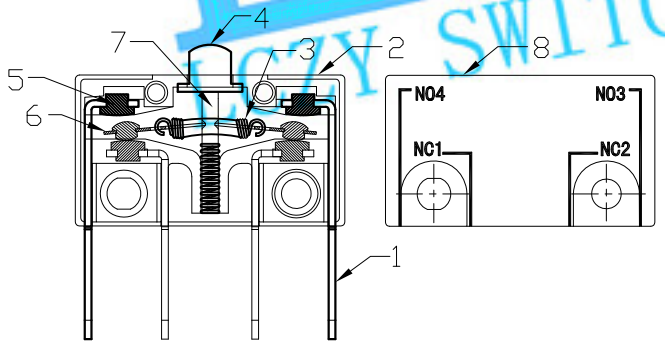

Structure chart

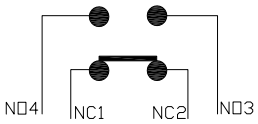

CIRCUIT DIAGRAM

MODEL CODE

RL020-00N-400-1
1 2 3 4

1.Series : RL020
2.Actuator : 00=Non-lever
3.Termination : N
4.Operating Force : see chart

1.Functional spec

1.1 Rated Voltage(AC)	125/250VAC
1.2 Rated Current(AC)	6A/3A
1.3 Contact Resistance	≤100mΩ(Initial value)
1.4 Operating Force	400±120gf
1.5 Bounce Time	
1.6 Free Position	13.1±0.5mm
1.7 Operating Position	11.7mm Min
1.8 Position Travel	
1.9 Return Force	

2.Reliable Rating

2.1 Mechanical Life	300,000 CYCLES
2.2 Electrical Life	50,000 CYCLES
2.3 Insulation Resistance	≥100MΩ DC250V
2.4 Withstand Voltage	AC1500V 1 minute
2.5 Soldering Technic	Hand Soldering
2.6 Operating Temper	-20°C ~ +80°C
2.7 Ambient Humidity Used	<85%RH

龙创中业 开关 插座 连接器 LCZY SWITCH

Material list

NO.	PARTS	MATERIAL	Q'TY	FINISHING
9				
8	Upper Housing	PBT(PLASBLACK)	1	
7	Fixed Rod	C5210	1	
6	Change Plate	C5210	2	
5	Contact	Silver alloy	6	
4	Button	PBT(PLASBLACK)	1	
3	Spring	SUS304	2	
2	Lower Housing	PBT(PLASBLACK)	1	
1	Terminal	C2680	4	

Tolerance: ±0.2

UNITS mm

MAT'L SEE NOTE

FINISH SEE NOTE

Q'TY

THESE DRAWINGS AND SPECIFICATIONS ARE THE PROPERTY OF ACCURATE INNOTECH INC AND SHALL NOT BE REPRODUCED, COPIED OR USED IN ANY MANNER WITHOUT THE PRIOR WRITTEN CONSENT OF ACCURATE INNOTECH INC.

LONGCHUANG ZHONGYE (HK)CO.,LIMITED

TITLE: MICRO SWITCH RL020 SERIES	PART NO.: RL020-00N-400-1
DR: Ricky 2017/6/8	DWG NO.: ATD-00N-400-1
CHKD: Ricky 2017/6/8	
APPD:	

SCALE	SHEET	REV.	CUSTOMER DRAWING
1:1	1/1	A	