Process Capable

RoHS Compliant 2002/95/EC

REV.	ECN. NO.	APPD.

DIMENSIONS

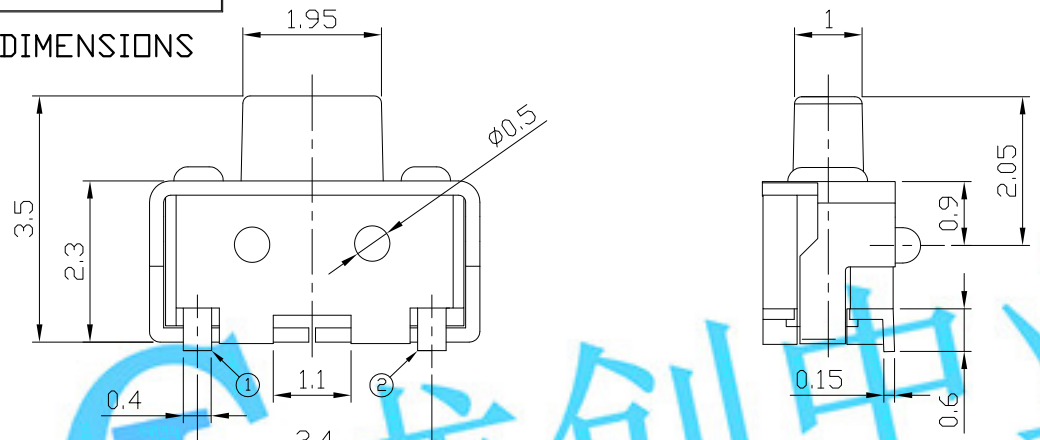

CIRCUIT DIAGRAM

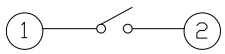

PRODUCT IMAGE

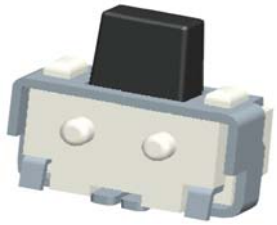

P.C.B MOUNTING PATTERN DIMENSION

The following soldering patterns are recommended for reflow soldering

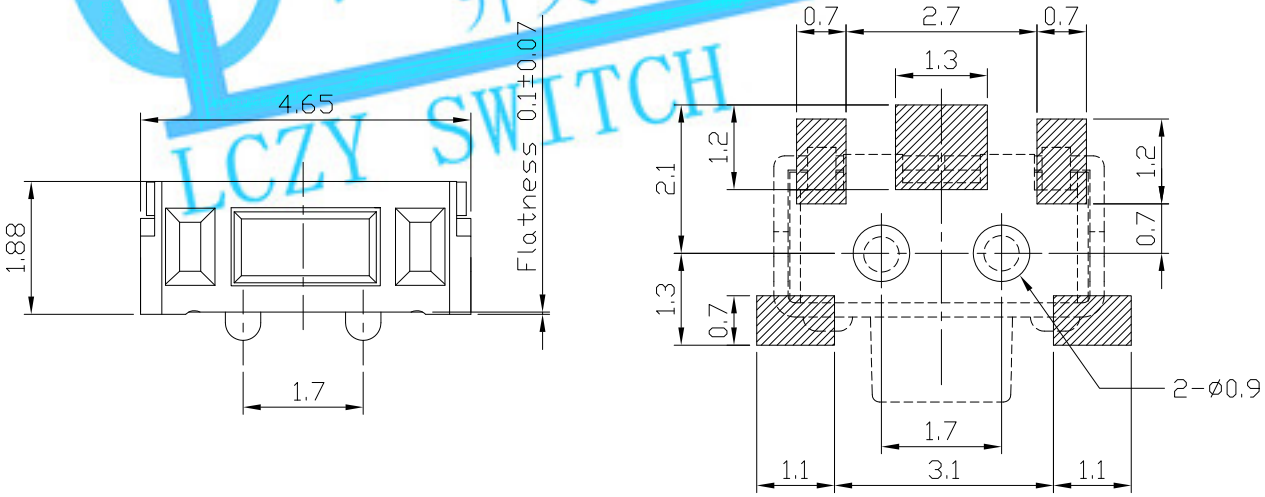

ELECTRO-MECHANICAL CHARACTERISTICS

Refer to additional specifications

Rating	DC 12V 50mA
Contact Resistance	100mΩ Max.
Travel	0.15 ± 0.1mm
Operating Force	160±50gf
Operating Life(cycles)	100,000

龙创中业 开关 | 插座 | 连接器 LCZY SWITCH

.X ±0.2	X. ±2°	UNITS mm	LONGCHUANG ZHONGYE (HK)CO.,LIMITED
		MAT'L SEE NOTE	TITLE: TACT SWITCH / PART NO.: AT-1100AAEP-G SERIES
		FINISH SEE NOTE	DR: Ricky 2014/03/24 / DWG NO.: ASI-1100AAEP-G
		Q'TY	CHKD: Ricky 2014/03/24
			APPD:

SCALE 1:1 | SHEET 1/1 | REV. A | CUSTOMER DRAWING

THESE DRAWINGS AND SPECIFICATIONS ARE THE PROPERTY OF ACCURATE INNOTECH INC AND SHALL NOT BE REPRODUCED, COPIED OR USED IN ANY MANNER WITHOUT THE PRIOR WRITTEN CONSENT OF ACCURATE INNOTECH INC.