Process Capable

RoHS Compliant 2002/95/EC

REV.	ECN. NO.	APPD.

DIMENSIONS

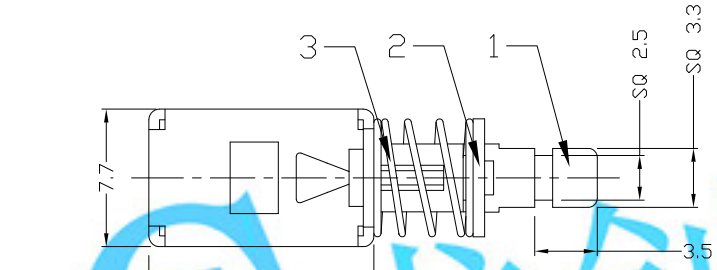

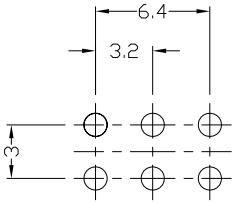

P.C.B LAYOUT

BOTTOM VIEW

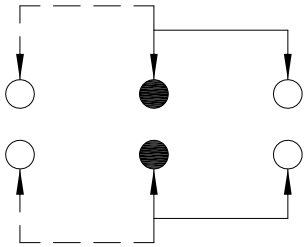

CIRCUIT DIAGRAM

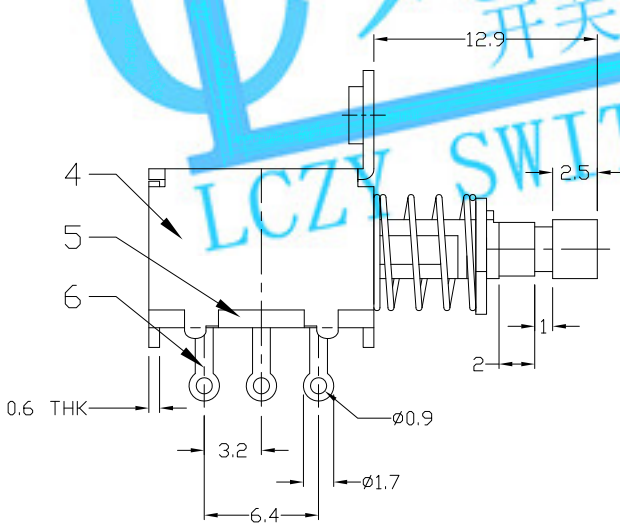

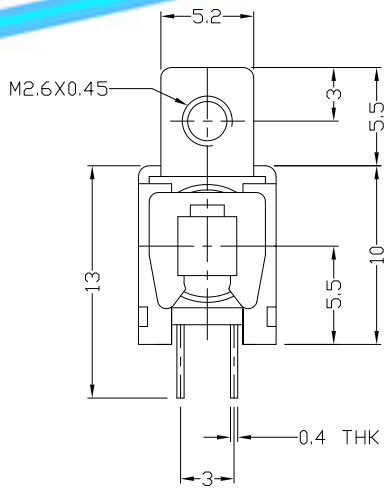

ELECTRO-MECHANICAL CHARACTERISTICS

Refer to additional specifications

RATING	DC50V 0.3A
CIRCUIT	2P2T
CONTACT RESISTANCE	100mΩ MAX.
TIMING	NON-SHORTING
OPERATING MODE	NON-LOCK
STROKE	TOTAL 3.5mm
OPERATING FORCE	250±100gf
OPERATING LIFE(cycles)	10,000

NO.	PARTS	MATERIAL	Q'TY	FINISHING
8	SCREEN	STEEL STRIP	1	Ni PLATED
7	CONTACT CLIP	PBS STRIP	2	Ag PLATED
6	TERMINAL	BRASS STRIP	6	Ag PLATED
5	BASE	PHENOLIC RESIN	1	NATURAL
4	FRAME	STEEL STRIP	1	Ni PLATED
3	SPRING	STEEL WIRE	1	Ni PLATED
2	BLOCK	STEEL STRIP	1	Ni PLATED
1	KNOB	PA66	1	BLACK

WITHIN 1.5mm:±0.1mm

OVER 1.5mm:±0.2mm

THESE DRAWINGS AND SPECIFICATIONS ARE THE PROPERTY OF ACCURATE INNOTECH INC AND SHALL NOT BE REPRODUCED, COPIED OR USED IN ANY MANNER WITHOUT THE PRIOR WRITTEN CONSENT OF ACCURATE INNOTECH INC.

UNITS mm

MAT'L SEE NOTE

FINISH SEE NOTE

Q'TY

LONGCHUANG ZHONGYE (HK)CO.,LIMITED

TITLE: PUSH SWITCH / HORIZONTAL

PART NO.: AP-22F17N

DR: Ricky 2015/03/31

DWG NO.: ADL-22F17

CHKD: Ricky 2015/03/31

APPD:

SCALE	SHEET	REV.	
2:1	1/1	A	CUSTOMER DRAWING

龙创中业 开关 || 插座 || 连接器 LCZY SWITCH